AIR TECH SYSTEMS

Technical Brochure

LTG Air Distribution

Constant flow rate controllers VRW (round) and VRX (rectangular)

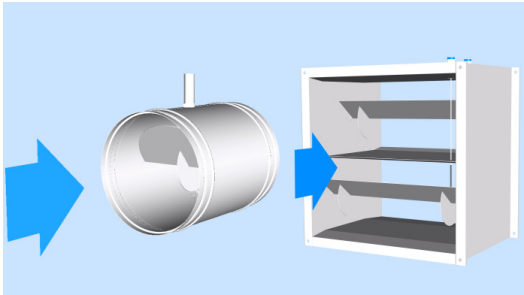

Self operated

www.LTG.net

Constant flow rate controllers type VRW and VRX, self-operated

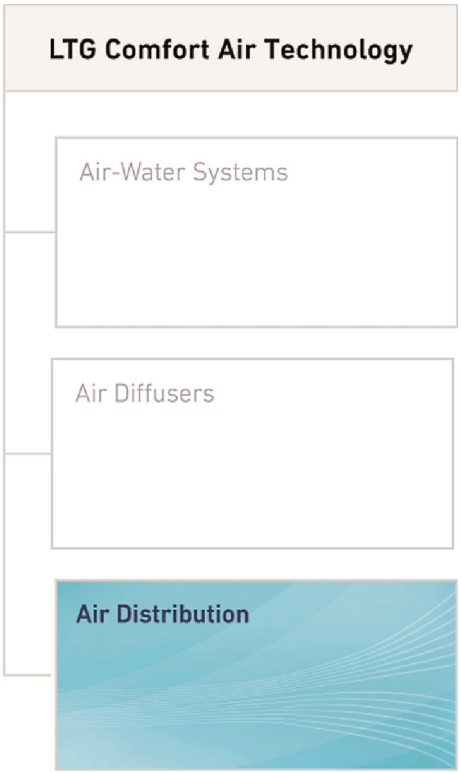

Content

Content	Page
Type VRW (round)	
Views of unit, function, application, advantages	3
Dimensions, flow rate, material numbers, version, constructional characteristics, accessories, minimum response pressure difference	4
Acoustics	5
Installation, maintenance, nomenclature	11
Type VRX (rectangular)	
View of unit, application, function, advantages, version, constructional characteristics, accessories	12
Dimensions, flow rate, material numbers	13
Selection, minimum response pressure difference	15
Acoustics	16
Installation, maintenance, nomenclature	19
Specifications	

Notes

Dimensions stated in this brochure are in mm.

Dimensions stated in this brochure are subject to General Tolerances according to DIN ISO 2768-vL.
Possible additional details are stated in the drawings.

Straightness and twist tolerances
according to DIN EN 12020-2.

The actual specifications are at the end of this document. They are available as a word document at your local distributor or at www.LTG-AG.com.

Constant flow rate controllers type VRW and VRX, self-operated
Type VRW, round

Views of unit

Constant flow rate controller type VRW

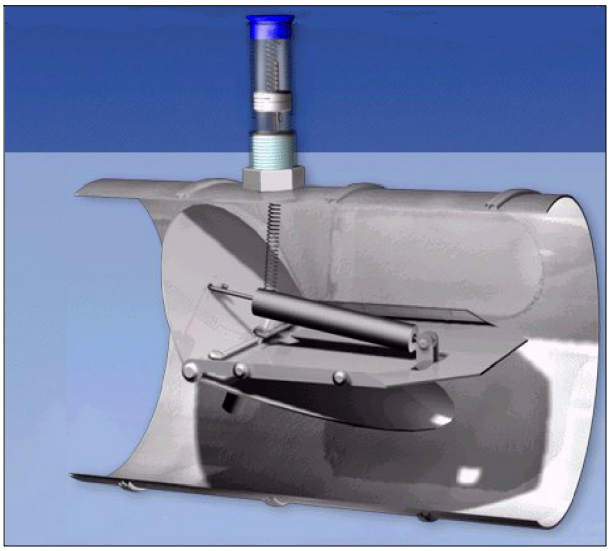

Schematic internal view

Function

VRW dampers are self-operated constant flow rate controllers (without auxiliary power supply). Flow control is obtained through an asymmetrically angled regulating blade on friction-free bearings, ensuring a precision response and regulating action even at low flow rates.

The constant flow rate controllers are delivered with the reference flow rate set in the factory.

The target flow rate is set by the client on site. The flow rate can be manually changed by the customer at any time with a hexagon socket wrench (2 mm) and read on a scale.

Application

The flow rate controller type VRW is intended for use in ventilation and air conditioning systems and designed for flow rate control of air. It controls a variable flow rate self-operated, i.e. without external power supply-pressure independent.

The controller operates from the minimum response pressure difference (see diagram page 4) up to the maximum pressure of 1000 Pa. Over this entire pressure range, the maximum flow rate deviation is ± l0 % (below 100 m³/h ± 10m³/h). At lower air speeds (below 4 m/s) and horizontal installation, the flow rate deviation may be larger. Detrimental inflow situations, contamination or slight tension during assembly may also lead to larger deviations.

When selecting the regulating unit and designing the air duct system it should be considered that the flow speed inside the air duct system remains above 2.7 m/s.

The air duct system up- and downstream of the flow rate controller should have the same diameter. As average and reference value, we recommend an average air speed in the air duct of approx. 4.5 m/s.

Advantages

- **Low housing leakage**
  The regulating blade is supported in a low-friction and maintenance-free PTFE socket that is not guided through the laser-welded pipe element wall of the controller. This prevents leakage and high-frequency whistling.
- **Installation in any duct orientation**
  Exact balancing of the regulating blade is realized through a counterweight, vertical to the regulating blade, ensuring a constant regulating action whatever the installation type.
- **Low-vibration**
  A pneumatic metal piston damper prevents the regulating blade from swinging and oscillating while maintaining an excellent response and regulating action.
- **Insensitive to contamination, ageing and temperature resistant**
  The controllers are insensitive to dust.
  The controller components are ageing and temperature resistant in a range of -30 °C to +100 °C.
  The anti-ageing snap-in rubber seal of EPDM material is resistant against slightly aggressive vapours or solvent vapours.
- **Simple installation and uninstallation**
  Plug ends with lip seal (standard)
- **Particularly suitable for visible installation**

Constant flow rate controllers type VRW and VRX, self-operated
Type VRW, round

Design, constructional features

The tube casings are made of hot galvanized sheet steel or alternatively stainless steel, laser butt welded without misalignment of the interior and exterior surfaces. The plug ends are pressure sized according to DIN 24147 TI, providing excellent dimensional stability and accuracy in fitting. The sockets have a lip seal of EPDM on either end.

The regulating blade is asymmetrically angled, supported in a PTFE socket and balanced with a counter-weight.
A pneumatic piston damper prevents the regulating blade from swinging.

Accessories

- Insulation shell 50 mm with sheet jacket of galvanized steel sheet
- Flexible silencer SDE-AO, of corrugated aluminium pipe
- Rigid silencer SDE-SO, with jacket of galvanized steel sheet
- Hexagon socket wrench SW2 (material number 1053341)
- Setting instructions (material number 1053340)

Dimensions, flow rate

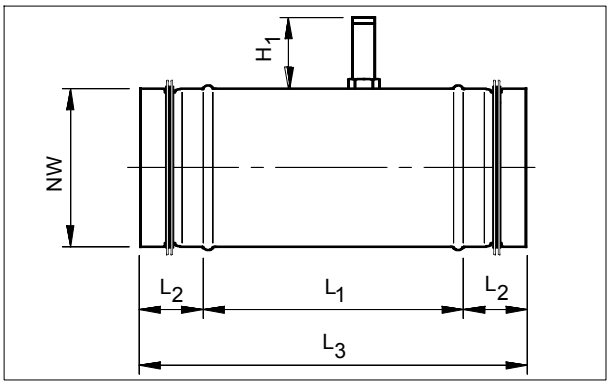

Version without insulating shell

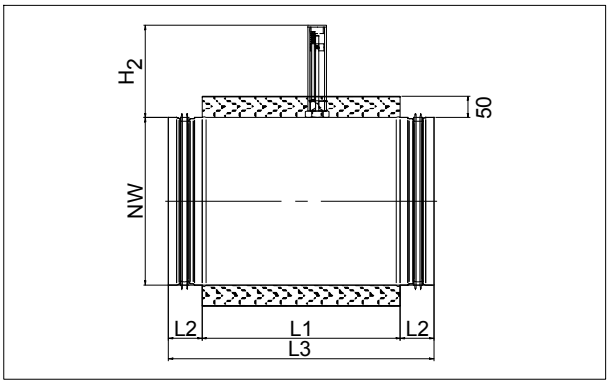

Version with insulating shell

Nom. size Ø [mm]	Dimensions [mm]					Setting* range [m³/h]		Max. static pressure difference [Pa]	Recommended duct air speed [m/s]	Material number	
	L_1	L_2	L_3	H_1	H_2	min.	max.			Without insulating shell	With insulating shell
80	135	40	215	70	110	40	125	1000	2.7 ... 6.0	1006089	1043624
100	170		250			70	220			1006090	1043625
125	170		250			100	280			1006026	1043626
160	240		320			180	500			1006028	1043628
200	240		320			250	900			1006029	1043629
250	240		320			500	1600			1006092	1043631
315	220	60	340	110	150	800	2800			1007327	1043633
400	295		415			1000	4000			1007328	1043636

* Setting of the flow rate is performed by the customer on site.

Static minimum response pressure difference at the flow rate controller

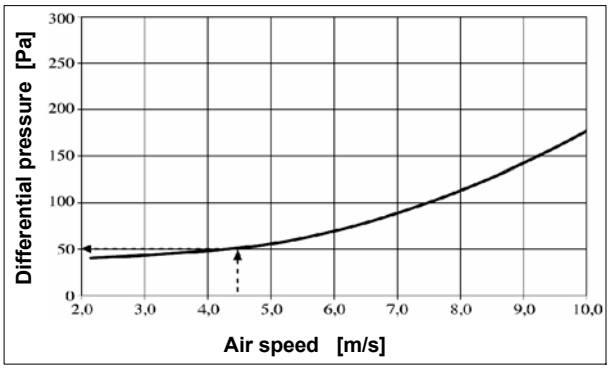

When designing the duct system, the static minimum response pressure difference of the flow rate controller should be considered (see chart).

Example

Given:
Flow rate controller Type VRW
Nominal size Ø 160 mm
Air speed 4.5 m/s
Flow rate 325 m³/h
Required:
Static minimum response pressure difference
Solution acc. to chart:
Δp 50 Pa

Constant flow rate controllers type VRW and VRX, self-operated
Type VRW, round

Airborne sound transmission and sound pressure level calculation

The sequence of sound classification starts at the sound source which may be of varying origin (e.g. fan and flow rate controller)..

Decisive for the different types of sound sources is the sound power level produced. In the following illustrations, it is represented in its values sorted by efficiency and possible effort.

The task is generally achievement of a specified sound pressure level in the room, with the type and size of the sound insulation to be specified for the specific application case.

Figure 1 shows a duct system without sound absorption. Highly varying air volumes and higher duct air speeds may result in an increased airborne sound transmission. This may be avoided through installation of an absorption damper (fig. 2, duct system insertion loss).

Figures 1 ... 4 represent a hypothetical application as in practice there are many acoustic inputs.

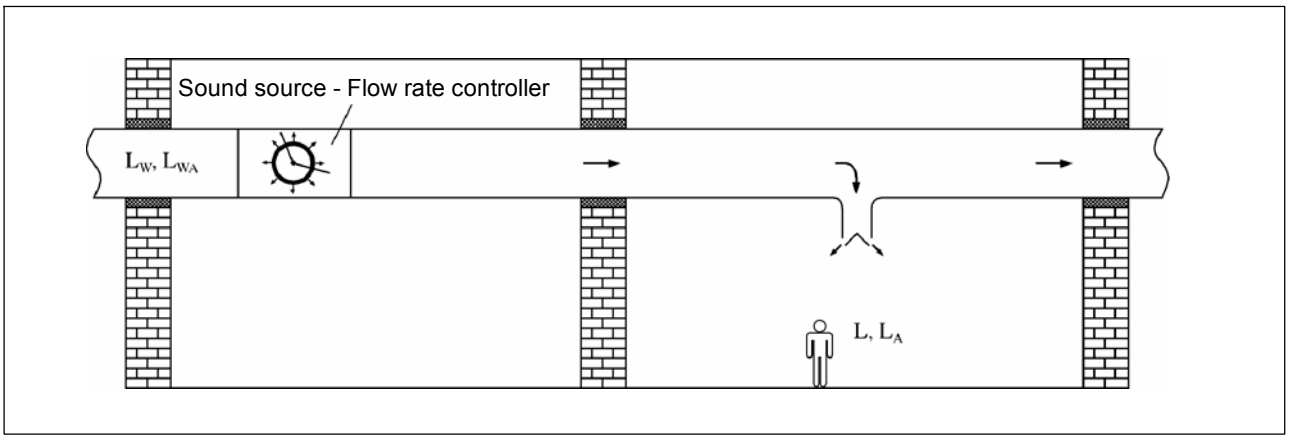

Figure 1: flow rate controller without sound absorption

Weighting example

Given:

Required room sound pressure level	42 dB(A)
Flow rate controller	type VRW
Nominal size	Ø 160 mm
Flow rate	340 m^3/h
Static pressure difference	100 Pa

Required:
Room sound pressure level

Calculated:
Room sound pressure level 38 dB(A)

Frequency f_m	**Level** [dB/Octave]								**A-weighted level** [dB(A)]
	63 Hz	125 Hz	250 Hz	500 Hz	1000 Hz	2000 Hz	4000 Hz	8000 Hz	
Airborne sound transmission L_W (chart 1, page 9)	53	51	48	44	43	42	36	34	49
Insertion loss / end reflection factor, e.g. linear air diffuser LDB 20/8/3 without sound trap	19	14	7	8	9	5	6	4	-
Room absorption	4	4	4	4	4	4	4	4	-
Sound pressure level L_P	30	33	37	32	30	33	26	26	-
Sound pressure level A-weighted L_{PA}	4	17	28	29	30	34	27	25	38

Constant flow rate controllers type VRW and VRX, self-operated
Type VRW, round

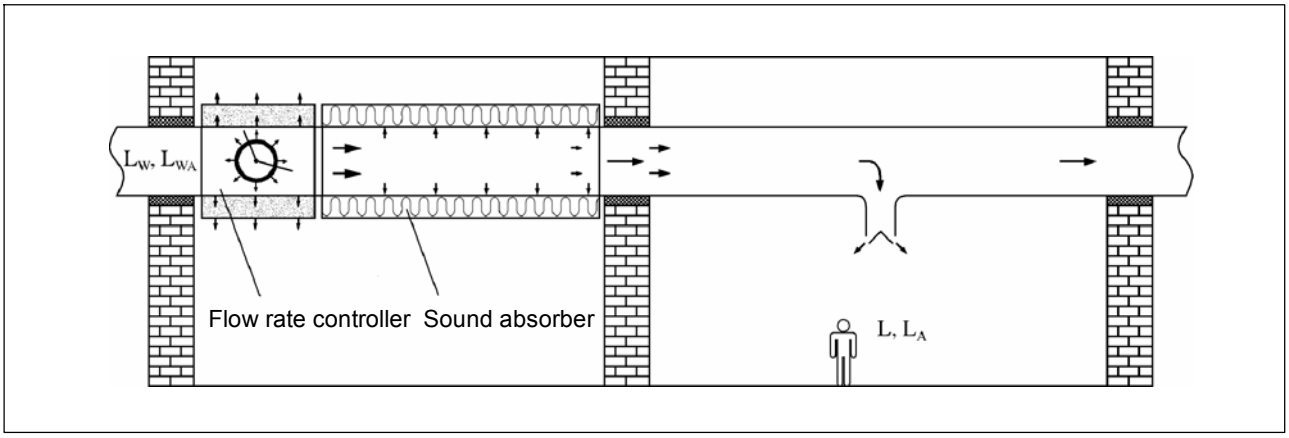

Figure2: Flow rate controller with sound absorption

Weighting example

Given:

Required room sound pressure level	38 dB(A)
Flow rate controller	type VRW
Nominal size	Ø 160 mm
Flow rate	340 m^3/h
Static pressure difference	250 Pa
Sound absorber SDE-AO 160	160/250 x 1000 mm

Required:
Room sound pressure level

Calculated:
Room sound pressure level 28 dB(A)

Frequency f_m	**Level** [dB/Octave]								**A-weighted level** [dB(A)]
	63 Hz	125 Hz	250 Hz	500 Hz	1000 Hz	2000 Hz	4000 Hz	8000 Hz	
Airborne sound transmission L_W (chart 1, page 9)	62	60	56	53	51	51	44	43	57
Insertion loss of the sound absorber, e.g. SDE-AO 160	3	5	10	21	39	30	25	22	-
Insertion loss / end reflection factor, e.g. linear air diffuser LDB 20/8/3 without sound trap	19	14	7	8	9	5	6	4	-
Room absorption	4	4	4	4	4	4	4	4	-
Sound pressure level L_P	36	37	35	20	-	12	9	13	-
Sound pressure level A-weighted L_{PA}	10	21	26	17	-	13	10	12	28

Constant flow rate controllers type VRW and VRX, self-operated
Type VRW, round

Casing radial noise

If a duct with an internal sound source (e.g. flow rate controller, fan noise) is led through a room, a certain sound emission through the duct surface into the room will occur.

However, the intensity of the sound pressure level perceived in the room depends on the sound pressure level inside the duct, the duct surface, the duct shape (round, rectangular), the duct wall thickness, the room absorption and the distance to the duct system.

For calculation of the sound pressure level expected in the room, the corresponding level correction value must be deducted from the sound power level inside the air duct (airborne sound transmission L_W octave).

The sound insulation resulting from a possible intermediate ceiling between the emitting duct system and the utilized room should be considered (typically 4 dB).

If the required maximum sound pressure level is exceeded, an insulated duct system with a higher sound reduction index may be required.

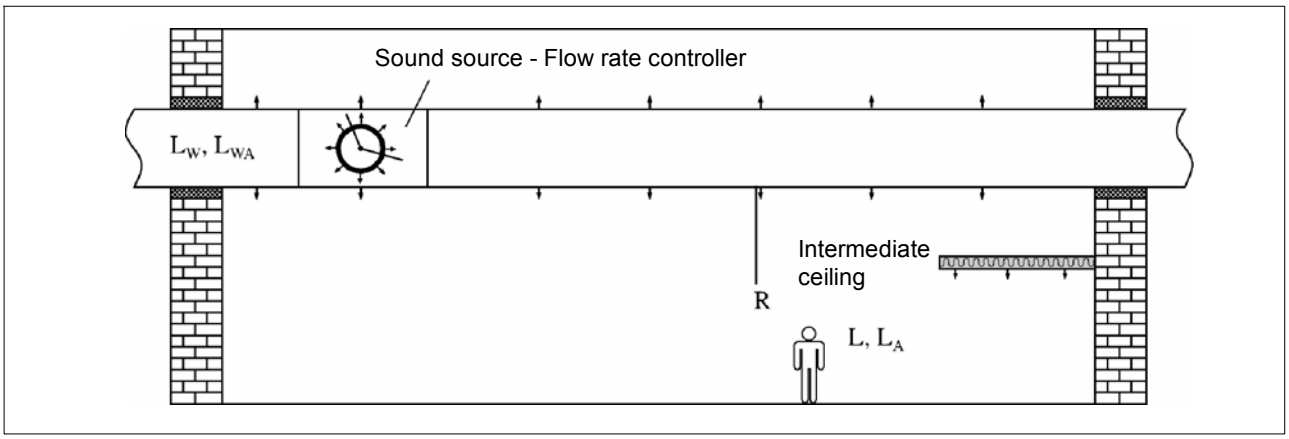

Figure 3: Air duct without insulating shell

Weighting example

Given:

Required sound pressure level	42 dB(A)
Flow rate controller	Typ VRW
Nominal size	Ø 160 mm
Flow rate	340 m^3/h
static pressure difference	250 Pa

Required:
Room sound pressure level

Calculated:

Room sound pressure level	41 dB(A)
With intermediate ceiling	-4 dB

Frequency f_m	**Level** [dB/Octave]								**A-weighted level** [dB(A)]
	63 Hz	**125 Hz**	**250 Hz**	**500 Hz**	**1000 Hz**	**2000 Hz**	**4000 Hz**	**8000 Hz**	
Airborne sound transmission L_W (chart 1, page 9)	62	60	56	53	51	51	44	43	57
Level correction value (chart 2, page 10)	23	23	20	18	11	10	9	8	-
Room absorption	4	4	4	4	4	4	4	4	-
Sound pressure level L_P	35	33	32	31	36	37	31	31	-
Sound pressure level A-weighted L_{PA}	9	17	23	26	36	38	32	30	41

Constant flow rate controllers type VRW and VRX, self-operated
Type VRW, round

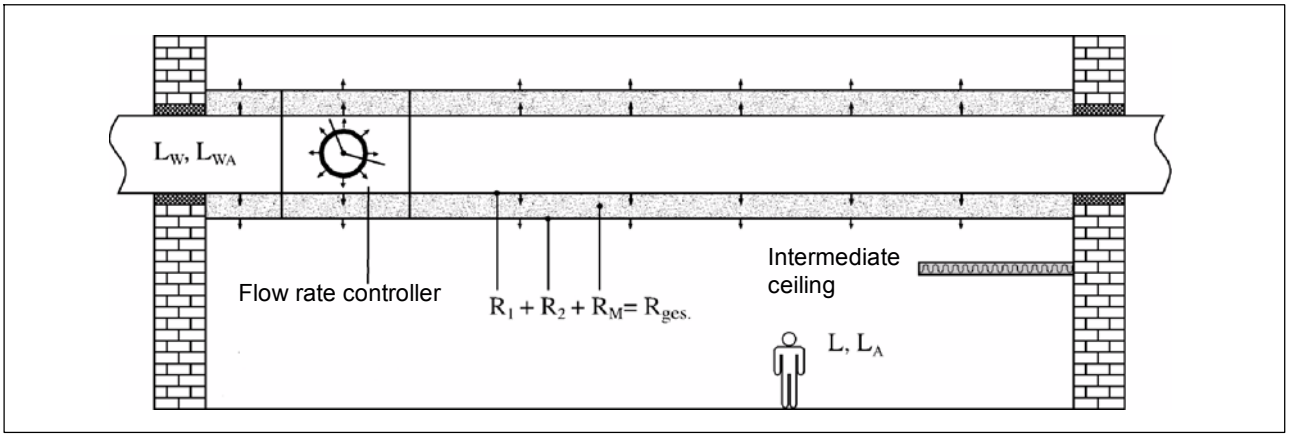

Figure 4: Air duct with insulating shell

Weighting example

Given:

Required room sound pressure level	38 dB(A)
Flow rate controller	Typ VRW
Nominal size	Ø 160 mm
Flow rate	500 m^3/h
Static pressure difference	500 Pa
Insulating shell	50 mm

Required:
Room sound pressure level

Calculated:

Room sound pressure level	25 dB(A)
With intermediate ceiling	-4 dB

Frequency f_m	**Level** [dB/Octave]								**A-weighted level** [dB(A)]
	63 Hz	125 Hz	250 Hz	500 Hz	1000 Hz	2000 Hz	4000 Hz	8000 Hz	
Airborne sound transmission L_W (chart 1, page 9)	72	70	67	64	62	62	56	54	68
Level correction value (chart 2, page 10)	29	28	35	40	44	51	54	44	-
Room absorption	4	4	4	4	4	4	4	4	-
Sound pressure level L_P	39	38	28	20	14	7	-	6	-
Sound pressure level A-weighted L_{PA}	13	22	19	17	14	8	-	5	25

Constant flow rate controllers type VRW and VRX, self-operated
Type VRW, round

Chart 1: Airborne sound transmission

Nominal size [mm]	Flow rate [m³/h]	Static pressure difference at the controller [Pa]																										
		100									250									500								
		Octave power level* L_W [dB/Octave]								Sum power level L_{Wtot} A-weighted [dB(A)]	Octave power level* L_W [dB/Octave]								Sum power level L_{Wtot} A-weighted [dB(A)]	Octave power level* L_W [dB/Octave]								Sum power level L_{Wtot} A-weighted [dB(A)]
		63 Hz	125 Hz	250 Hz	500 Hz	1000 Hz	2000 Hz	4000 Hz	8000 Hz		63 Hz	125 Hz	250 Hz	500 Hz	1000 Hz	2000 Hz	4000 Hz	8000 Hz		63 Hz	125 Hz	250 Hz	500 Hz	1000 Hz	2000 Hz	4000 Hz	8000 Hz	
80	40	37	37	35	33	33	33	28	27	38	39	42	43	44	44	46	41	41	50	46	49	49	50	51	53	48	48	57
	82	49	47	44	41	39	39	33	32	45	51	51	50	49	48	49	44	44	54	58	58	56	55	55	56	51	51	61
	125	52	51	48	45	44	44	38	37	49	61	60	57	54	53	53	47	46	58	68	66	63	61	59	59	53	52	65
100	70	40	39	38	36	35	36	30	29	41	43	45	46	46	47	49	44	43	53	49	52	52	53	54	55	50	50	60
	135	50	48	45	42	41	40	34	33	46	59	57	54	51	50	49	43	42	55	60	60	58	57	57	58	53	52	63
	200	54	52	49	47	45	45	39	38	51	63	61	58	55	54	54	48	47	59	70	68	65	62	61	60	54	53	66
125	100	41	40	38	36	35	36	30	29	41	45	47	47	48	48	49	44	43	54	52	54	54	54	55	56	50	49	60
	190	51	49	46	42	41	40	34	32	46	55	54	53	51	51	51	46	45	56	61	61	59	58	57	58	52	52	63
	280	54	53	50	47	45	45	39	37	50	63	61	58	55	54	53	47	46	59	64	64	62	61	61	62	57	56	67
160	180	44	43	41	39	38	38	32	31	43	48	50	50	50	50	51	46	45	56	55	57	57	57	57	58	53	51	63
	340	53	51	48	44	43	42	36	34	48	62	60	56	53	51	51	44	43	57	64	64	62	60	60	60	55	54	65
	500	57	55	52	49	47	47	40	39	52	66	64	61	58	56	55	49	48	61	72	70	67	64	62	62	56	54	68
200	250	45	43	41	39	38	37	31	30	43	51	52	52	51	51	51	45	44	56	57	59	58	58	57	58	52	50	63
	575	55	53	50	46	44	44	37	36	50	64	62	58	55	53	53	46	45	59	66	66	64	62	62	62	56	56	67
	900	-	-	-	-	-	-	-	-	-	68	66	63	60	58	58	52	50	64	75	73	70	67	65	65	58	57	70
250	500	48	47	45	43	41	41	35	34	47	54	56	55	55	54	55	49	48	60	61	62	62	61	61	62	56	54	66
	1000	57	55	52	49	47	46	39	38	52	66	64	61	57	55	55	48	47	61	69	68	67	65	64	64	59	58	69
	1500	-	-	-	-	-	-	-	-	-	70	68	65	62	60	60	53	52	65	77	75	72	68	67	66	60	58	72
315	600	48	46	44	41	39	39	32	31	44	55	56	55	54	53	53	46	44	58	62	63	62	61	60	59	53	51	65
	1400	57	55	52	48	46	45	39	37	51	66	64	60	57	55	54	47	46	60	70	69	67	65	64	64	58	57	69
	2200	-	-	-	-	-	-	-	-	-	71	69	65	62	60	59	53	51	65	77	75	72	69	67	66	60	58	72
400	100	50	48	45	42	41	40	33	31	46	58	59	57	56	55	54	47	45	59	65	65	64	62	61	61	54	51	66
	2200	58	56	52	49	47	46	39	37	52	67	65	61	57	55	54	48	46	61	72	71	68	66	65	65	59	57	70
	3800	-	-	-	-	-	-	-	-	-	73	71	67	64	62	61	55	53	67	79	77	74	70	68	68	61	60	74

* Sound power level in dB/octave referring to 10^{-12} W

The flow rate controller's sound power may be increased in case of additional sound sources (e.g. fan, unfavourable flow conditions etc.). If this additional sound power level is by about 10 dB below the sound power level of the flow rate controller, it may neglected. The A-weighted sound power level (airborne sound transmission L_{WtotA}) does not include the duct outlet and room absorption.

The room and outlet absorption may be calculated, but is generally around 8 dB. (value depending on room equipment). In order not to exceed the required sound pressure level of a room, installation of a suitably selected absorptive silencer between the flow rate controller and the room or insulation of the duct system is necessary.

Casing radiation depends on local conditions, the emitting duct surface (duct diameter and length) behind the sound absorber and the sound insulation. In practice, values obtained in test labs do not necessarily comply with the actual conditions found in a duct system.

Constant flow rate controllers type VRW and VRX, self-operated
Type VRW, round

Chart 2: Sound emission (casing radiated noise)

Nominal size [mm]	Duct non jacketed Correction value [dB/Octave]								Duct with 50 mm insulating shell Correction value [dB/Octave]							
	63 Hz	125 Hz	250 Hz	500 Hz	1000 Hz	2000 Hz	4000 Hz	8000 Hz	63 Hz	125 Hz	250 Hz	500 Hz	1000 Hz	2000 Hz	4000 Hz	8000 Hz
80	36	33	32	23	17	12	11	11	42	37	45	46	47	54	56	47
100	34	32	30	22	16	12	11	10	41	38	46	45	47	54	57	47
125	29	29	31	24	21	19	15	11	35	36	42	48	51	60	58	45
160	23	23	20	18	11	10	9	8	29	28	35	40	44	51	54	44
200	22	19	16	16	15	11	9	8	26	22	29	37	42	51	53	43
250	19	16	13	12	12	10	9	8	25	20	26	35	41	50	52	42
315	18	14	12	13	11	11	8	8	26	18	26	38	42	51	53	45
400	17	11	10	10	10	9	7	6	20	16	23	33	39	48	50	40

Selection criteria to be observed

Optimum selection of the most suitable flow rate controller should not only be based on the design duct air speed but consider other criteria as well. An air speed calculated too low or too high may result in over- or under-sized duct cross sections which may limit the space for installation of the duct system or - in case of cross sections designed too large - cause increased duct overall installation costs.

Heat and acoustic insulation should also be considered in this context.

Legend
(general, acoustically relevant indices)

L_W	[dB]	Sound power level
L_{WA}	[dB(A)]	Sound power level, A-weighted
L_P	[dB]	Sound pressure level
L_{PA}	[dB(A)]	Sound pressure level, A-weighted
R	[dB]	Sound reduction index
R_1	[dB]	Sound reduction index of the inner pipe jacket
R_2	[dB]	Sound reduction index of the outer pipe jacket
R_M	[dB]	Sound reduction index of mineral wool
R_{ges}	[dB]	Total sound reduction index

Constant flow rate controllers type VRW and VRX, self-operated
Type VRW, round

Installation

At installation, the flow direction according to the arrow on the type sign must be observed.

Pushing in of the plug-in ends into the air duct leads to a plug connection that is air-tight according to DIN EN 12237 Class D. The plug connection permits disconnecting the components again after assembly.

The lip seal is inserted into a bead. If the lip seal has been accidentally damaged or lost, it can be replaced by a new loose sealing ring without additional gluing.

The controller can be installed in vertical and horizontal air ducts independently of position. At installation into vertical air ducts, additional protection against pulling out must be provided.

At connection to the main air duct a straight flow distance of at least 2.5 D must be complied with and rounding at the branch must be observed. If the controller is attached right to the air duct, a punched sheet with 20 % blockage must be intended.

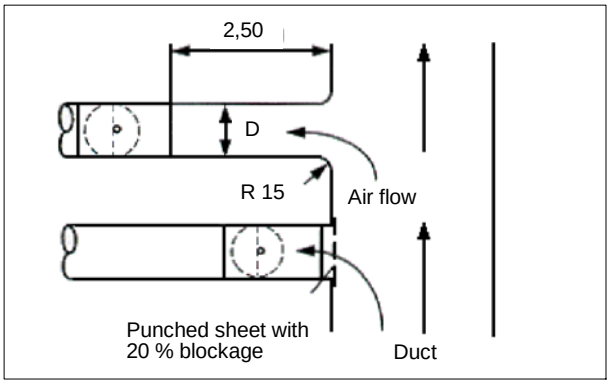

Placement when connecting the air duct

At free suction, always place an inlet part with a rounding radius of at least 15 mm on the air duct.

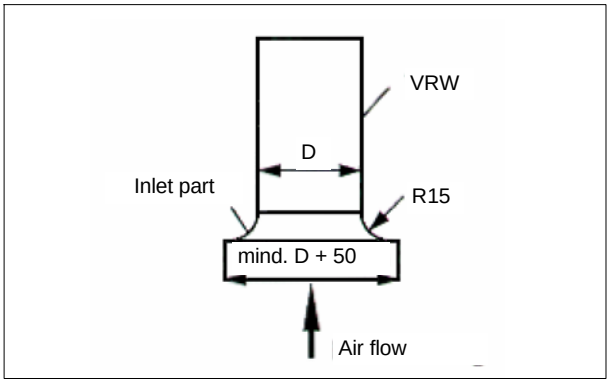

Free suction

Observe that flexible pipes do not exceed the lengths recommended in DIN 1946 part 2.

The air ducts and flow rate controllers must be attached and suspended stably.

The air duct should be free of dirt and loose objects since the function of the controller will otherwise be impaired.

According to DIN 1946 part 2, accessibility to the duct system and to the flow rate controller is to be provided for adjustment and repair.

Maintenance

Under standard conditions, all components are maintenance-free and resistant to aging and corrosion.

Nomenclature

VRW	... /	. /	. /	. /	. /	.... - ....
(1)	(2)	(3)	(4)	(5)	(6)	(7)

(1) **Constant-flow rate controller, round**

(2) **Size resp. Ø** **80**, **100**, **125**, **160**, **200**, **250**, **315**, **400**

(3) **Version** **S** = steel, galvanized

(4) **Insulating shell** **–** = without, **D** = with

(5) **Connection** **L** = with lip-seal

(6) **Drive** **–** = without

(7) **Setting range** (see page 4) [m³/h]-[m³/h]

Constant flow rate controllers type VRW and VRX, self-operated
Type VRX, rectangular

View of unit

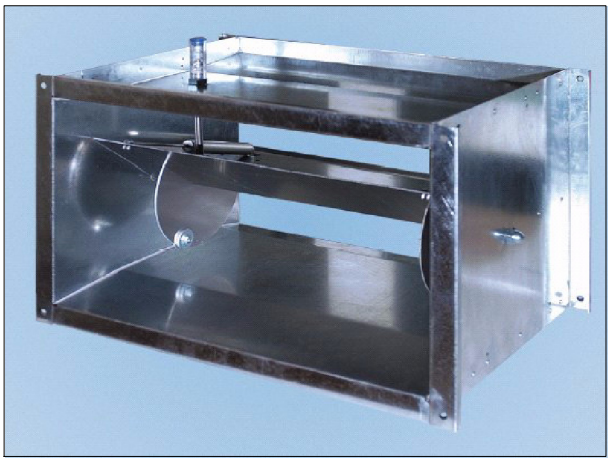

Constant flow rate controller type VRX

Application

The flow rate controller type VRX is intended for use in ventilation and air conditioning systems and designed for flow rate control of air. It controls a consistent flow rate self-operated, i.e. without external power supply-pressure independent.

The controller operates from the minimum response pressure difference (see chart on page 15) up to the maximum pressure of 1000 Pa. Over this entire pressure range, the maximum flow rate deviation is ± 10 %. At lower air speeds (below 4 m/s) and horizontal installation, the flow rate deviation may be larger. Detrimental inflow situations, contamination or slight tension during assembly may also lead to larger deviations.

When selecting the regulating unit and designing the air duct system it should be considered that the flow speed inside the air duct system remains above 3 m/s.

The air duct system up- and downstream of the flow rate controller should have the same diameter. As average and reference value, we recommend an average air speed in the air duct of approx. 6.5 m/s.

Function

For self-operated constant flow rate controllers (without auxiliary power supply) the flow rate control is obtained through an asymmetrically angled regulating blade on friction-free bearings, ensuring a precision response and regulating action even at small flow rates.

The constant flow rate controllers are delivered with reference flow rate set in the factory.

The target flow rate is set by the client on site. The flow rate can be manually changed by the customer with a hexagon socket wrench (2 mm) at any time and read on a scale.

Advantages

- **Low housing leakage**
  The regulating blade is supported in a low-friction and maintenance-free PTFE socket that is not guided through the laser-welded pipe element wall of the controller. This prevents leakage and high-frequency whistling.
- **Installation in any duct orientation**
  Exact balancing of the regulating blade is realized through a counterweight, vertical to the regulating blade, ensuring a constant regulating action whatever the installation type.
- **Low-vibration**
  A pneumatic metal piston damper prevents the regulating blade from swinging and oscillating while maintaining an excellent response and regulating action.
- **Insensitive to contamination, ageing and temperature resistant**
  The controllers are insensitive to dust.
  The controller components are ageing and temperature resistant in a range of -30 °C to +100 °C.
- **Simple installation and uninstallation**
  Plug ends with lip seal (standard)
- **Particularly suitable for visible installation**

Design, constructional features

The housing of the flow rate controller is made of galvanized steel sheet.

The regulating blade is asymmetrically angled, supported in a PTFE socket and balanced with a counter-weight.
A pneumatic piston damper prevents the regulating blade from swinging.

Accessories

- Insulation shell 30 mm with sheet jacket of galvanized sheet steel
- Splitter silencer type SDF-SM with frame and jacket of continuously galvanized sheet steel, splitter based on absorber principle
- Hexagon socket wrench SW2 (material number 1053341)
- Setting instructions (material number 1053340)

Constant flow rate controllers type VRW and VRX, self-operated
Type VRX, rectangular

Chart 3.1: Dimensions and flow rate, up to H = 250 mm

Dimensions				Setting range		Material number	
Width B [mm]	Height H [mm]	Height H_1 [mm]	Length L [mm]	V_{min} [m³/h]	V_{max} [m³/h]	Without insulating shell	With insulating shell
200	100	70	220	200	325	1032370	1050421
				326	600	1053339	1053823
300	100	70	220	200	350	1037707	1050422
				351	500	1053344	1053830
				501	800	1053347	1053831
400	100	70	220	300	550	1038326	1050423
				551	1100	1053691	1053832
300	150	70	220	400	800	1032372	1050424
400	150	70	220	600	900	1038328	1050428
200	200	70	220	400	500	1038330	1050432
				501	625	1053761	1053835
				626	1000	1053763	1053836
300	200	70	220	500	1050	1037738	1050433
				1051	1600	1053764	1053837
				1601	2000	1053765	1053838
400	200	70	220	600	850	1022948	1050434
				851	1450	1053766	1053839
				1451	2150	1053767	1053840
				2151	2800	1053768	1053852
500	200	60	385	1000	2125	1038331	1050436
				2126	3500	1053769	1053853
600	200	60	385	1500	3000	1032371	1050437
				3001	4500	1053771	1053854
300	250	60	385	800	1400	1032812	1050438
				1401	2700	1053772	1053855
400	250	60	385	1000	1550	1022949	1050439
				1551	2350	1053773	1053856
				2351	3500	1053774	1053857
500	250	60	385	1300	2250	1022950	1050440
				2251	3050	1053775	1053858
				3051	4300	1053778	1053859
600	250	60	385	1500	2750	1045063	1050442
				2751	5000	1053779	1053860

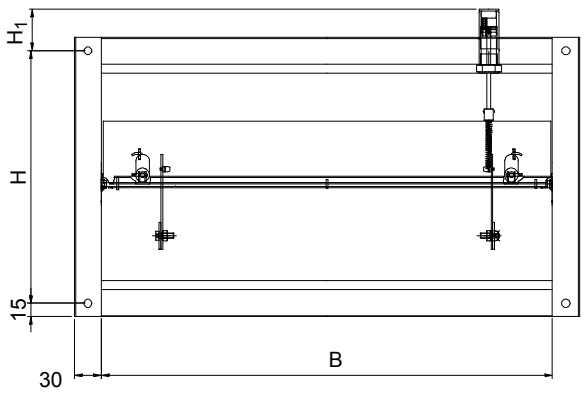

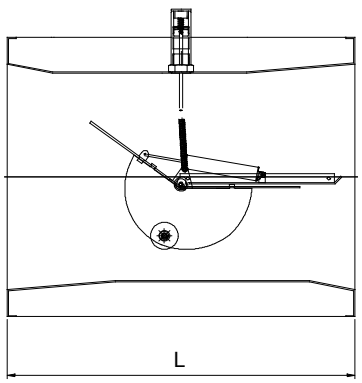

Shown: version without insulating shell

Version with insulating shell see page 14

Constant flow rate controllers type VRW and VRX, self-operated
Type VRX, rectangular

Chart 3.2: Dimensions and flow rate, from H = 300 mm

Dimensions				Setting range		Material number	
Width B [mm]	**Height H** [mm]	**Height H_1** [mm]	**Length L** [mm]	**V_{min}** [m³/h]	**V_{max}** [m³/h]	**without insulating shell**	**with insulating shell**
300	300	60	385	700	1150	1031698	1050443
				1151	2050	1053780	1053916
				2051	3000	1053781	1053918
400	300	60	385	1100	1450	1031662	1050444
				1451	2000	1053783	1053924
				2001	2750	1053784	1053925
				2751	4300	1053785	1053926
500	300	60	385	1000	1100	1022951	1050445
				1101	1750	1053786	1053929
				1751	2750	1053787	1053930
				2751	4000	1053790	1053931
				4001	4300	1053792	1053932
				4301	5500	1053793	1053933
600	300	60	385	1500	2750	1022952	1050446
				2751	4500	1053794	1053934
				4501	5250	1053796	1053935
				5251	6500	1053797	1053936
400	400	60	385	1200	1700	1037691	1050447
				1702	2900	1053798	1053937
				2902	4300	1053799	1053938
				4302	5600	1053800	1053939
500	400	60	385	2000	4250	1031660	1050448
				4252	7000	1053801	1053940
600	400	60	385	3000	6000	1027808	1050449
				6002	9000	1053802	1053941
500	500	60	425	2600	4500	1027810	1050450
				4502	6100	1053803	1053942
				6102	8600	1053804	1053943
600	500	60	425	3000	5500	1027813	1050451
				5502	10000	1053805	1053944
600	600	60	470	3000	5500	1032174	1050452
				5502	9000	1053806	1053945
				9002	10500	1053807	1053946
				10502	13000	1053808	1053947

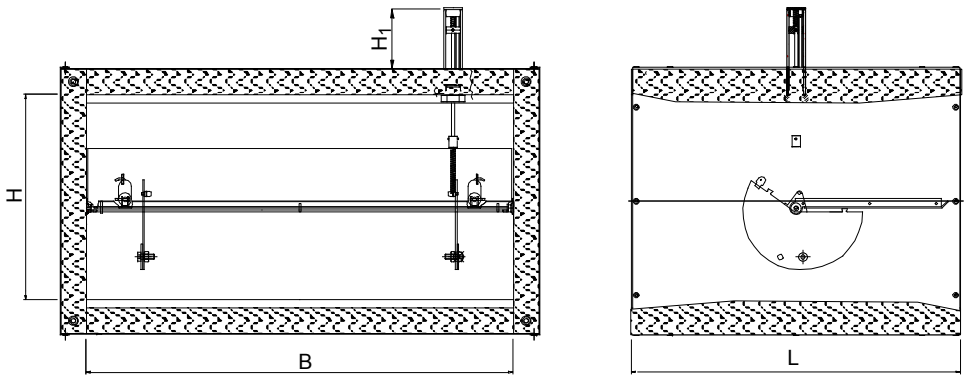

Shown:
version
without
insulating shell

Version
with
insulating shell
see page 13

Constant flow rate controllers type VRW and VRX, self-operated
Type VRX, rectangular

Quick flow rate selection based on the duct cross section

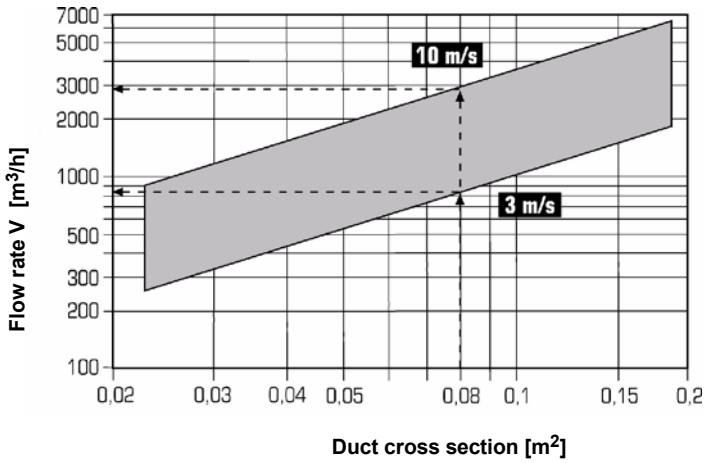

Example

Given:

Flow rate controller	Type VRX
Nominal size	400 x 200 mm (duct cross section 0.08 m²)

Required:

Flow rate to be selected

Solution acc. to chart:

about 850 m^3/h (at 3 m/s)
up to about 2900 m^3/h (at 10 m/s)

Note

One controller does not cover the entire flow rate range from 3 to 10 m/s air speed, but only the selected partial area. Therefore, the desired flow rate range (according to tables on pages 13 and 14) should always be indicated in orders. The upper and lower threshold of the air speed range (3 or 10 m/s) serves as orientation value and can deviate in individual controllers.

Static minimum response pressure difference at the flow rate controller

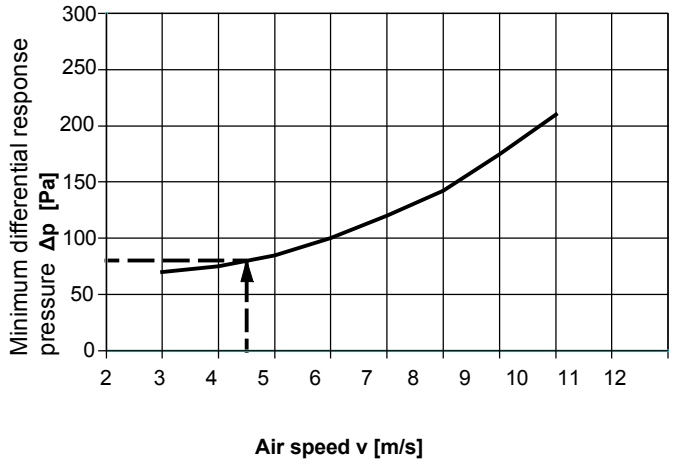

Example

Given:

Flow rate controller	Type VRX
Nominal size	300 x 200 mm
Flow speed	4.5 m/s
Flow rate	972 m³/h

Required:

Static minimum
response pressure difference

Solution acc. to chart:

Δp	80 Pa

Note

When designing the duct system, the static minimum response pressure difference of the flow rate controller should be considered (see chart).

Constant flow rate controllers type VRW and VRX, self-operated
Type VRX, rectangular

Chart 4: Airborne sound transmission

Width [mm]	Height [mm]	Flow speed [m/s]	Flow rate [m³/h]	Static pressure difference at the controller [Pa] 100									250									500								
				Octave power level L_W * [dB/Octave]								Sum power level L_{Wtot} A-weighted [dB(A)]	Octave power level L_W * [dB/Octave]								Sum power level L_{Wtot} A-weighted [dB(A)]	Octave power level L_W * [dB/Octave]								Sum power level L_{Wtot} A-weighted [dB(A)]
				63 Hz	125 Hz	250 Hz	500 Hz	1000 Hz	2000 Hz	4000 Hz	8000 Hz		63 Hz	125 Hz	250 Hz	500 Hz	1000 Hz	2000 Hz	4000 Hz	8000 Hz		63 Hz	125 Hz	250 Hz	500 Hz	1000 Hz	2000 Hz	4000 Hz	8000 Hz	
200	100	2,8	202	48	47	46	44	42	40	37	35	48	56	55	54	52	50	48	45	43	59	62	61	60	58	56	54	51	49	62
		6,3	435	53	53	52	50	49	47	45	42	54	61	61	60	58	57	55	53	50	62	67	67	66	64	63	61	59	56	68
		9,7	698	-	-	-	-	-	-	-	-	-	64	64	63	62	61	59	57	59	66	70	70	69	68	67	65	63	61	72
300	100	2,0	216	46	45	44	42	40	37	35	42	45	54	53	52	50	48	45	43	40	53	60	59	58	56	54	51	49	46	59
		4,7	508	53	52	51	49	47	45	43	40	53	61	60	59	57	55	53	51	48	61	67	66	65	63	61	59	57	54	67
		7,4	799	-	-	-	-	-	-	-	-	-	64	63	62	61	59	57	55	53	65	70	69	68	67	65	63	61	59	71
400	100	2,1	302	47	46	45	43	41	38	35	32	46	55	54	53	51	49	46	43	40	54	61	60	59	57	55	52	49	46	60
		4,9	705	53	53	51	50	48	46	44	41	54	61	60	59	58	56	54	52	49	62	67	66	65	64	62	60	58	55	68
		7,6	1094	-	-	-	-	-	-	-	-	-	64	64	63	61	60	58	56	53	65	70	70	69	67	66	64	62	59	71
300	150	3	486	52	50	49	47	45	43	40	37	50	60	58	57	55	53	51	48	45	58	66	64	63	61	59	57	54	51	64
		6	972	56	56	54	53	51	49	47	44	57	64	64	62	61	59	57	55	52	65	70	70	68	67	65	63	61	58	71
		9	1458	59	59	58	56	55	53	51	48	60	67	66	66	64	63	61	59	56	68	73	73	72	70	69	67	65	62	74
200	200	3	432	52	50	49	47	45	43	40	37	50	60	58	57	55	53	51	48	45	58	66	64	63	61	59	57	54	51	64
		6	864	56	56	54	53	51	49	47	44	57	64	64	62	61	59	57	55	52	65	70	70	68	67	65	63	61	58	71
		9	1296	59	59	58	56	55	53	51	48	60	67	66	66	64	63	61	59	56	68	73	73	72	70	69	67	65	62	74
300	200	3	648	53	52	50	48	46	44	41	38	51	61	60	58	56	54	52	49	46	59	67	66	64	62	60	58	55	52	65
		6	1296	58	57	56	54	52	50	48	45	58	66	65	64	62	60	58	56	53	66	72	71	70	68	66	64	62	59	72
		9	1944	61	60	59	57	56	54	52	49	61	69	68	67	65	64	62	59	57	69	75	74	73	71	70	68	65	63	75
400	200	3	684	54	52	51	49	47	44	41	38	52	62	60	59	57	55	52	49	46	60	68	66	65	63	61	58	55	52	66
		6	1728	59	58	56	55	53	51	48	45	58	67	66	64	63	61	59	56	53	66	73	72	70	69	67	65	62	59	72
		9	2592	61	61	60	58	56	54	52	49	62	69	69	68	66	64	62	60	57	70	75	75	74	72	70	68	66	63	76
300	300	3	972	54	53	51	49	47	45	42	39	53	62	61	59	57	55	53	50	47	61	68	67	65	63	61	59	56	53	67
		6	1944	60	58	57	56	54	51	49	46	59	67	66	65	63	62	59	57	54	67	74	72	71	69	68	65	63	60	73
		9	2916	62	62	60	59	57	55	53	50	63	70	69	68	67	65	63	61	58	71	76	75	74	73	71	69	67	64	77
600	300	3	1944	56	55	53	51	49	46	43	40	54	64	63	61	59	57	54	51	48	62	70	69	67	65	63	60	57	54	68
		6	3888	62	60	59	57	55	53	50	47	61	70	68	67	65	63	61	58	55	69	76	74	73	71	69	67	64	61	75
		9	5832	65	64	62	61	59	57	54	51	64	73	72	70	69	67	65	62	59	72	79	78	76	75	73	71	68	65	78
400	400	3	1728	56	55	53	51	49	46	43	40	54	64	63	61	59	57	54	51	48	62	70	69	67	65	63	60	57	54	68
		6	3456	62	60	59	57	55	53	50	47	61	70	68	67	65	63	61	58	55	69	76	74	73	71	69	67	64	61	75
		9	5184	-	-	-	-	-	-	-	-	-	73	72	70	69	67	65	62	59	72	79	78	76	75	73	71	68	65	78
500	400	3	2160	57	56	54	52	49	46	43	40	55	65	64	62	60	57	54	51	48	63	71	70	68	66	63	60	57	54	69
		6	4320	62	61	60	58	56	53	51	48	61	70	69	68	66	64	61	59	56	69	76	75	74	72	70	67	65	62	75
		9	6480	-	-	-	-	-	-	-	-	-	73	72	71	69	67	65	63	60	73	79	78	77	75	73	71	69	66	79
600	400	3	2592	58	56	54	52	50	47	44	41	55	66	64	62	60	58	55	52	48	63	72	70	68	66	64	61	58	54	69
		6	5184	63	62	60	58	56	54	51	48	62	71	70	68	66	64	62	59	56	69	77	76	74	72	70	68	65	62	76
		9	7776	-	-	-	-	-	-	-	-	-	74	73	71	70	68	65	63	60	73	80	79	77	76	74	71	69	66	79
500	500	3	2700	58	56	54	52	50	47	44	41	55	66	64	62	60	58	55	52	49	63	72	70	68	66	64	61	58	55	69
		6	5400	63	62	60	59	56	54	51	48	62	71	70	68	66	64	62	59	56	70	77	76	74	73	70	68	65	62	76
		9	8100	-	-	-	-	-	-	-	-	-	74	73	72	70	68	66	63	60	73	80	79	78	76	74	72	69	66	79
600	500	3	3240	58	56	55	53	50	47	44	41	56	66	65	63	61	58	55	52	49	64	72	71	69	67	64	61	58	55	70
		6	6480	64	62	61	59	57	54	51	48	62	72	70	69	67	64	62	59	56	70	78	77	75	73	71	68	65	62	76
		9	9720	-	-	-	-	-	-	-	-	-	75	74	72	71	68	66	63	61	74	81	80	78	77	74	72	70	67	80
600	600	3	3888	59	57	55	53	51	48	45	41	56	67	65	63	61	59	56	53	49	64	73	71	69	67	65	62	59	55	70
		6	7778	65	63	62	60	57	55	52	49	63	72	71	69	68	65	62	60	57	71	78	77	76	74	71	69	66	63	77
		9	11664	-	-	-	-	-	-	-	-	-	75	74	73	71	69	67	64	61	74	82	80	79	77	75	73	70	67	80

* Sound power level in dB/Octave referring to 10^{-12} W

Constant flow rate controllers type VRW and VRX, self-operated
Type VRX, rectangular

Calculating example to chart 4 airborne sound transmission

Frequency f_m	**Level** [dB/Octave]								**Sum level A-weighted** [dB(A)]
	63 Hz	125 Hz	250 Hz	500 Hz	1000 Hz	2000 Hz	4000 Hz	8000 Hz	
Airborne sound transmission L_W (chart 4, page 16)	53	52	50	48	46	44	41	38	51
Reflection loss	-18	-10	-5	-1	0	0	0	0	-
Room absorption	-4	-4	-4	-4	-4	-4	-4	-4	-
Sound pressure level L_P	31	38	41	43	42	40	37	34	-
Sound pressure level A-weighted L_{PA}	5	22	32	40	42	41	38	33	47

Example

Given:

Flow rate controller	Type VRX
Nominal size	300 x 200 mm
Flow rate	648 m³/h
Flow speed	3 m/s
Static pressure difference Δp	100 Pa

Required:

Sound pressure level of airborne sound transmission of a 6 m duct with integrated flow rate controller and insulation

Calculated:

Room sound pressure level 47 dB(A)

Constant flow rate controllers type VRW and VRX, self-operated
Type VRX, rectangular

Chart 5: Correction values for calculating the casing radiated noise of a 6 m long duct with integrated flow rate controller

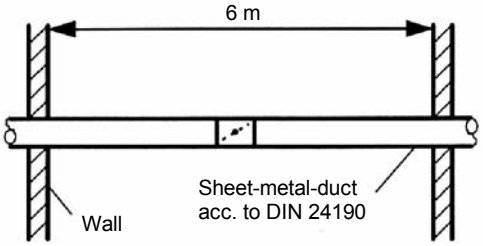

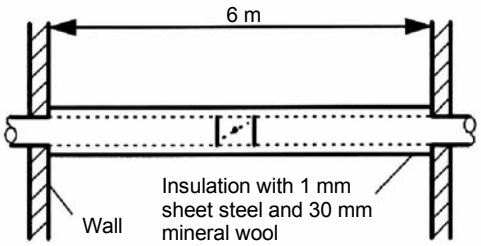

Width [mm]	Height [mm]	without insulating shell								with insulating shell							
		Sound power level L_W [dB/Octave]								Sound power level L_W [dB/Octave]							
		63 Hz	125 Hz	250 Hz	500 Hz	1000 Hz	2000 Hz	4000 Hz	8000 Hz	63 Hz	125 Hz	250 Hz	500 Hz	1000 Hz	2000 Hz	4000 Hz	8000 Hz
200	100	0	2	3	4	6	7	8	7	0	4	7	12	16	18	18	16
300	100	0	5	6	8	9	11	10	9	0	7	10	16	19	22	20	18
400	100	0	5	6	8	9	11	10	9	0	7	10	16	19	22	20	18
300	150	0	4	5	6	8	9	11	11	0	6	9	14	18	20	21	20
200	200	0	2	2	3	4	6	7	8	0	4	6	11	14	17	17	17
300	200	0	4	5	6	8	9	11	11	0	6	9	14	18	20	21	20
400	200	0	4	5	6	8	9	11	11	0	6	9	14	18	20	21	20
300	300	0	3	4	5	6	8	9	11	0	5	8	13	16	19	19	20
600	300	0	4	4	6	7	9	10	12	0	6	8	14	17	20	20	21
400	400	0	3	4	5	6	8	9	11	0	5	8	13	16	19	19	20
500	400	0	4	4	6	7	9	10	10	0	6	8	14	17	20	20	19
600	400	0	4	4	6	7	9	10	10	0	6	8	14	17	20	20	19
500	500	0	4	4	6	7	9	10	10	0	6	8	14	17	20	20	19
600	500	0	4	4	6	7	9	10	10	0	6	8	14	17	20	20	19
600	600	0	4	4	6	7	9	10	10	0	6	8	14	17	20	20	19

Frequency f_m	Level [dB/Octave]								Sum level A-weighted [dB(A)]
	63 Hz	125 Hz	250 Hz	500 Hz	1000 Hz	2000 Hz	4000 Hz	8000 Hz	
Airborne sound transmission L_W (chart 4, page 16)	53	52	50	48	46	44	41	38	51
Correction value (chart 5, page 18)	-0	-6	-9	-14	-18	-20	-21	-20	-
Room absorption	-4	-4	-4	-4	-4	-4	-4	-4	-
Sound pressure level L_P	49	42	37	30	24	20	16	14	-
Sound pressure level A-weighted L_{PA}	23	26	28	27	24	21	17	13	33

Example

Given:

Flow rate controller	Type VRX with 30 mm insulating shell
Nominal size	300 x 200 mm
Flow rate	648 m^3/h
Flow speed	3 m/s
Static pressure difference Δp	100 Pa

Required:

Sound pressure level of airborne sound transmission emission of a 6 m duct with integrated flow rate controller and insulation

Calculated:

Room-sound pressure level 33 dB(A)

Constant flow rate controllers type VRW and VRX, self-operated
Type VRX, rectangular

Installation

The controller is to be simply installed in the duct system with a flange profile. At assembly, the flow direction must be observed according to the arrow on the type sign.

The controller can be installed independently of position into vertically and horizontally placed air ducts.

When connecting to the air duct, a straight inflow distance of at least 2x (width W x height H) must be complied with (for dimensions, see pages 13 and 14).

The air ducts and flow rate controllers must be attached and suspended stably.

The air duct should be free of dirt and other loose objects, or the controller function will be impaired.

According to DIN 1946 part 2, accessibility to the duct system and to the flow rate controller is to be provided for adjustment and repair.

Maintenance

Under standard conditions, all components are maintenance-free and resistant to ageing and corrosion.

Nomenclature

VRX	**... x ... x ... /**	**. /**	**. /**	**. /**	**. /**	**.... - ....**
(1)	(2)	(3)	(4)	(5)	(6)	(7)

(1) **Constant-flow rate controller, rectangular**

(2)	**Size**	**width x height x length**
(3)	**Version**	**S** = steel, galvanized
(4)	**Insulating shell**	**–** = without **D** = with
(5)	**Connection**	**F** = flange
(6)	**Drive**	**–** = without
(7)	**Setting range** (see pages 13, 14)	[m³/h] - [m³/h]

Specification and schedule of prices
Constant flow rate controller type VRW

Quantity	Description of services	Unit price in €	Total price in €

Self-operated constant flow rate controller type VRW.

Suitable for differential pressures of 50 to 1000 Pa,
temperature range from -30 up to +100 °C. High control accuracy.
Subsequent adjustment of the factory-set flow rate possible.
For installation independent of position.
Resistant to ageing, maintenance-free.

Comprising of:

- Round casing of galvanized sheet steel overlapping laser beam welded. Connection on both sides through interior transition pieces with lip seal.
- Damper of aluminium, in plastic bearing for smooth movement, air tight.
- Vibration damper of aluminium
- Setting device with flow rate scale

Sizes, dimensions, flow rates, material numbers

Dimensions		**Setting range**		**Mat. no.**	**Quantity**	**Mat. No.**	**Quantity**
Nom. width [mm]	**Install. length** [mm]	**V_{min}** [m³/h]	**V_{max}** [m³/h]	**without insulating shell**		**with insulating shell**	
80	135	40	125	1006089		1043624	
100	170	70	220	1006090		1043625	
125	170	100	280	1006026		1043626	
160	240	180	500	1006028		1043628	
200	240	250	900	1006029		1043629	
250	240	500	1600	1006092		1043631	
315	220	800	2800	1007327		1043633	
400	295	1000	4000	1007328		1043636	

Manufacturer: **LTG Aktiengesellschaft**
Series: **Constant flow rate controller**
Model: **VRW**

Accessories, special equipment (optional, at extra charge)

o Insulating shell 50 mm with jacket of galvanized sheet steel

Specification and schedule of prices
Constant flow rate controller type VRX

Quantity	Description of services	Unit price in €	Total price in €
	Self-operated constant flow rate controller type VRX. Suitable for differential pressures of 70 to 1000 Pa, temperature range from -30 up to +100 °C. High control accuracy. Subsequent adjustment of the factory-set flow rate possible. For installation independent of position. Resistant to ageing, maintenance-free. Comprising of: - Rectangular casing of galvanized sheet steel with flanged connection C30 on both sides. - Damper of aluminum, in plastic bearing for smooth movement and air tight - Vibration damper of aluminum - Setting device with flow rate scale **Sizes, dimensions, flow rates und and material numbers** see page 2 ff **Manufacturer:** **LTG Aktiengesellschaft** **Series:** **Constant flow rate controller** **Model:** **VRX** **Accessories, special equipment** (optional, at extra charge): o Insulating shell 30 mm with jacket of galvanized sheet steel		

Specification and schedule of prices
Constant flow rate controller type VRX

Quantity	Description of services	Unit price in €	Total price in €

Sizes, dimensions, flow rates, material numbers – up to height = 250 mm

Dimensions			Setting range		Material number	Quantity	Material number	Quantity
Width	Height	Length	V_{min}	V_{max}	without insulating shell		with insulating shell	
[mm]	[mm]	[mm]	[m³/h]	[m³/h]				
200	100	220	200	325	1032370		1050421	
			326	600	1053339		1053823	
300	100	220	200	350	1037707		1050422	
			351	500	1053344		1053830	
			501	800	1053347		1053831	
400	100	220	300	550	1038326		1050423	
			551	1100	1053691		1053832	
300	150	220	400	800	1032372		1050424	
400	150	220	600	900	1038328		1050428	
200	200	220	400	500	1038330		1050432	
			501	625	1053761		1053835	
			626	1000	1053763		1053836	
300	200	220	500	1050	1037738		1050433	
			1051	1600	1053764		1053837	
			1601	2000	1053765		1053838	
400	200	220	600	850	1022948		1050434	
			851	1450	1053766		1053839	
			1451	2150	1053767		1053840	
			2151	2800	1053768		1053852	
500	200	385	1000	2125	1038331		1050436	
			2126	3500	1053769		1053853	
600	200	385	1500	3000	1032371		1050437	
			3001	4500	1053771		1053854	
300	250	385	800	1400	1032812		1050438	
			1401	2700	1053772		1053855	
400	250	385	1000	1550	1022949		1050439	
			1551	2350	1053773		1053856	
			2351	3500	1053774		1053857	
500	250	385	1300	2250	1022950		1050440	
			2251	3050	1053775		1053858	
			3051	4300	1053778		1053859	
600	250	385	1500	2750	1045063		1050442	
			2751	5000	1053779		1053860	

Specification and schedule of prices
Constant flow rate controller type VRX

Quantity	Description of services									Unit price in €	Total price in €
	Sizes, dimensions, flow rates, material numbers – from height = 300 mm										
	Dimensions			**Setting range**		**Material number**	**Quantity**	**Material number**	**Quantity**		
	Width [mm]	**Height** [mm]	**Length** [mm]	**V_{min}** [m³/h]	**V_{max}** [m³/h]	**without insulating shell**		**with insulating shell**			
	300	300	385	700	1150	1031698		1050443			
				1151	2050	1053780		1053916			
				2051	3000	1053781		1053918			
	400	300	385	1100	1450	1031662		1050444			
				1451	2000	1053783		1053924			
				2001	2750	1053784		1053925			
				2751	4300	1053785		1053926			
	500	300	385	1000	1100	1022951		1050445			
				1101	1750	1053786		1053929			
				1751	2750	1053787		1053930			
				2751	4000	1053790		1053931			
				4001	4300	1053792		*1053932*			
				4301	5500	1053793		*1053933*			
	600	300	385	1500	2750	1022952		*1050446*			
				2751	4500	1053794		*1053934*			
				4501	5250	1053796		1053935			
				5251	6500	1053797		1053936			
	400	400	385	1200	1700	1037691		1050447			
				1702	2900	1053798		1053937			
				2902	4300	1053799		1053938			
				4302	5600	1053800		1053939			
	500	400	385	2000	4250	1031660		1050448			
				4252	7000	1053801		1053940			
	600	400	385	3000	6000	1027808		1050449			
				6002	9000	1053802		1053941			
	500	500	425	2600	4500	1027810		1050450			
				4502	6100	1053803		1053942			
				6102	8600	1053804		1053943			
	600	500	425	3000	5500	1027813		1050451			
				5502	10000	1053805		1053944			
	600	600	470	3000	5500	1032174		1050452			
				5502	9000	1053806		1053945			
				9002	10500	1053807		1053946			
				10502	13000	1053808		1053947			

AIR TECH
SYSTEMS

Comfort Air Technology

Air-Water Systems
Air Diffusers
Air Distribution

Process Air Technology

Fans
Filtration technology
Humidification Technology

Engineering Services

Laboratory Test / Experiment
Field Measurement / Optimisation
Simulation / Analysis
R&D / Start-up

LTG Aktiengesellschaft
Grenzstraße 7
70435 Stuttgart
Germany
Tel.: +49 711 8201-0
Fax: +49 711 8201-720
info@LTG.de
www.LTG.net

LTG Incorporated
105 Corporate Drive, Suite E
Spartanburg, SC 29303
USA
Tel..: +1 864 599-6340
Fax: +1 864 599-6344
info@LTG-INC.net
www.LTG-INC.net

VRW/VRX-eng-TP (08/15) 429-22
© LTG Aktiengesellschaft • Former editions are invalid • Subject to technical modifications